捷通 电子

Automobile Switch

Q-2860

TYPE: **ASW-07D**

SPECIFICATIONS

Rating: 25A 12V DC
Contact R: 50mΩ max
Insulation R: 500V DC 1OOMΩ min
Dielectric Strength: 1 Minute 1500V AC
Operating Temperature: -25°C ~ +85°C
Electrical Life: 10, 000 Cycles

Outline Drawing

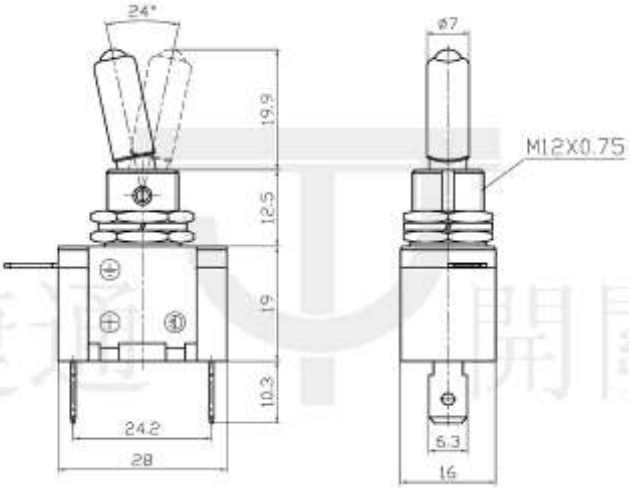

Mounting

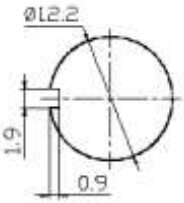
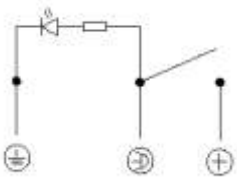
Circuitry