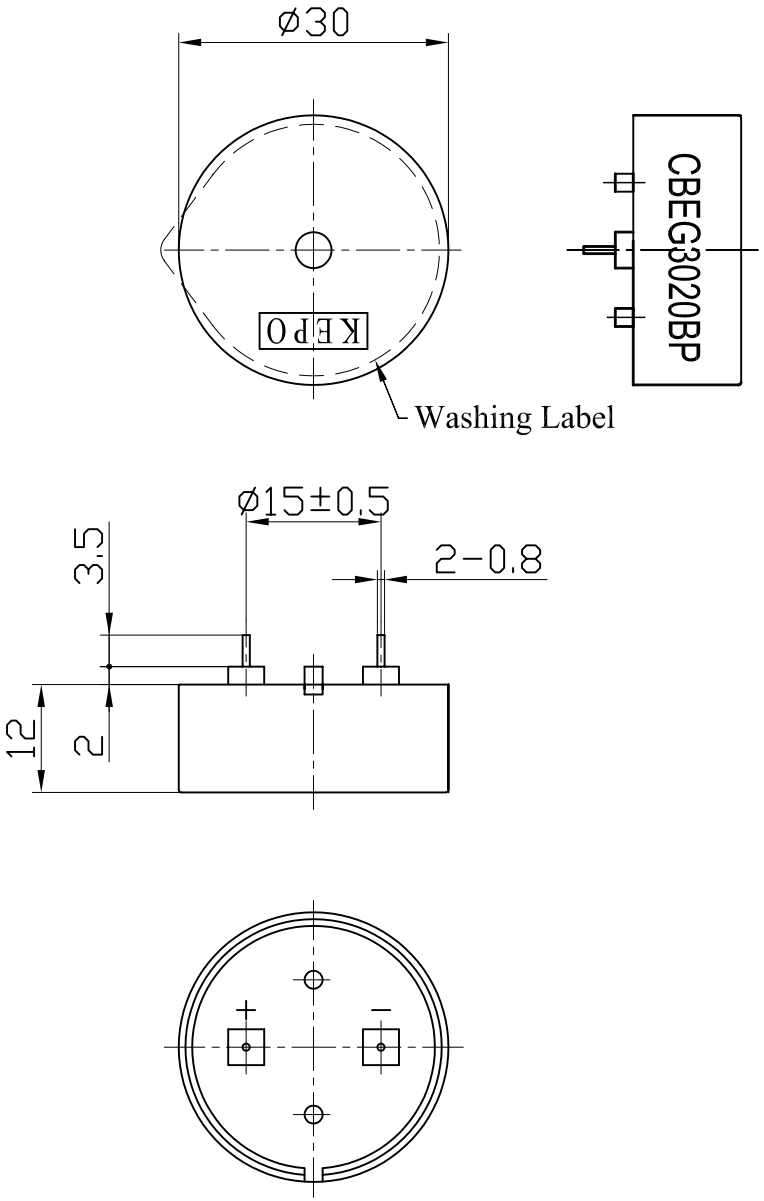

Specifications

1.Rated Voltage.....12Vp-p Square Wave
2.Operating Voltage.....3~30Vp-p Square Wave
3.Max. Rated Current.....4mA
4.Min. Sound Pressure Level.....75dB /30cm
5.Resonant Frequency.....2.0±0.5KHz
6.Capacitance at 100Hz.....26000±30%pF
7.Shell Material/Color.....PC/Black
8.Operating Temperature.....-20~+85℃
9.Store Temperature.....-30~+85℃
10.Weight.....6g

Compliance with ROHS

No.	DESCRIPTION	APPROVED	DATE

TOLERANCES UNLESS NOTED OTHERWISE
.X ±
.XX ±
.XXX ±
90° FORMED ANGLES +2° -1°
FIRST ANGLE PROJECTION

APPROVALS		DATE
DRAWN		
CHECKED	水成锋	
APPROVED	梁树棠	09.08.18

KEPO NINGBO KEPO ELECTRONIC CO.,LTD
http://www.chinaacoustic.com

Piezo Transducer QUARTZ-1 LTD
CBEG3020BP-1080

UNIT mm | DWG NO. OEM1080R
SCALE NOT TO SCALE | SHEET | VER 1.0