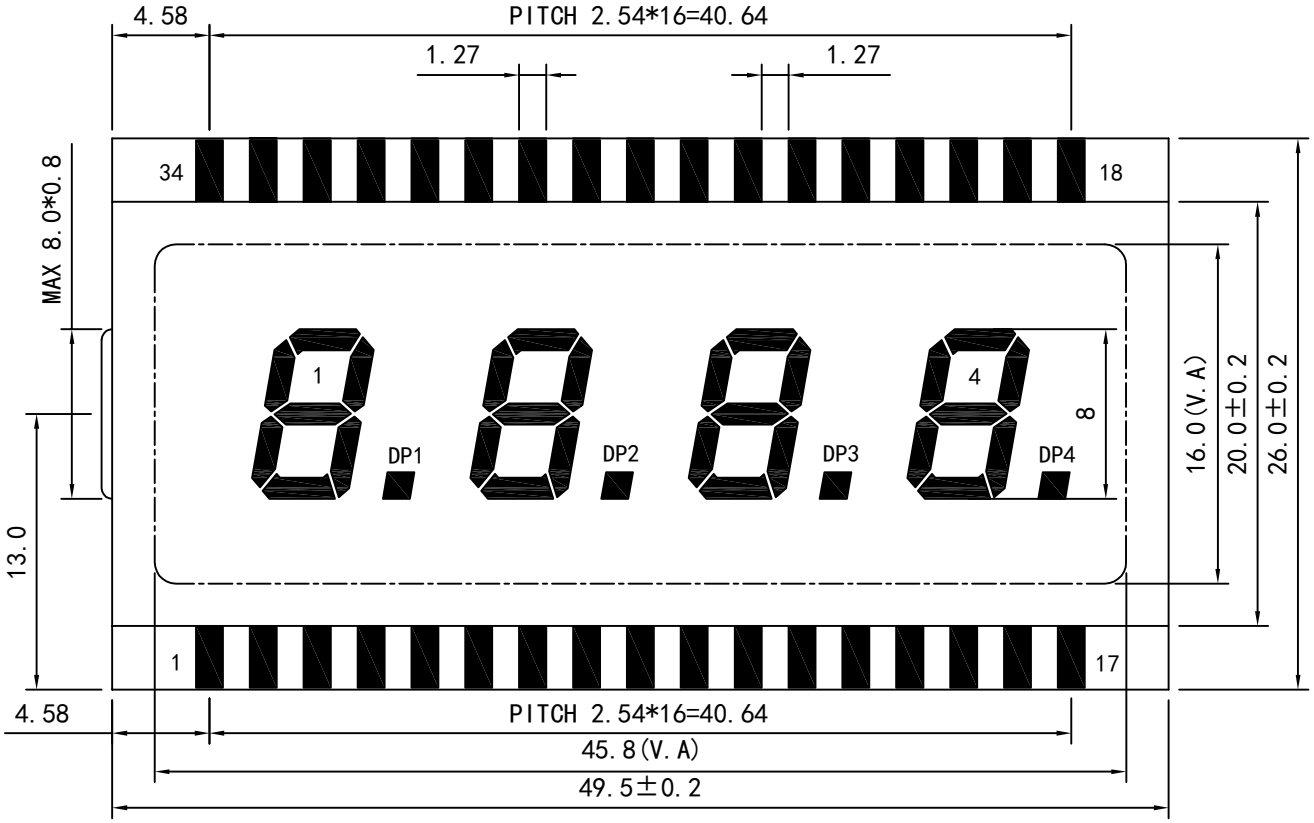

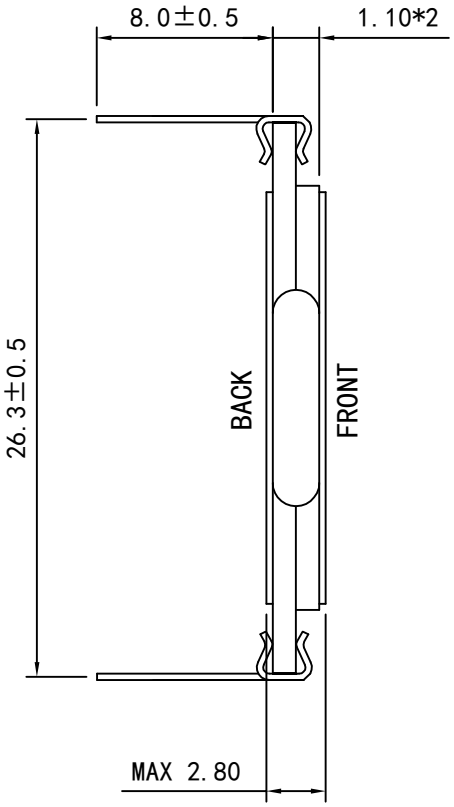

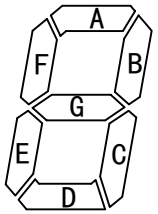

PIN	1	2	3	4	5	6	7	8	9	10	11	12	13	14	15	16	17
COM	COM	1E	1D	1C	DP1	2E	2D	2C	DP2	3E	3D	3C	DP3	4E	4D	4C	DP4
PIN	18	19	20	21	22	23	24	25	26	27	28	29	30	31	32	33	34
COM	4G	4B	4A	4F	3G	3B	3A	3F	2G	2B	2A	2F	1G	1B	1A	1F	COM

NOTES:
1. VIEWING ANGLE: 6:00 O'CLOCK
2. DISPLAY MODE:POSITIVE/REFLECTIVE/TN TYPE
3. DRIVING VOLTAGE:5.0V,STATIC
4. OPERATING TEMP.:-10° C TO 50° C
5. STORAGE TEMP.:-20° C TO 60° C
6. CONNECTOR:PIN TYPE

VER.	MODIFY CONTENTS	DATE	DESIGN
6			
5			
4			
3			
2			
1			

PART NO. FP1125P
DESIGN BY 5-4/8
CHECKED BY GD2936
APP BY

TOLERANCES UNLESS OTHERWISE STATED
.X ±0.20 .XXX ±0.10
.XX ±0.10 ANGLES±1°
ALL DIMENSIONS IN MM
UNLESS OTHERWISE STATED
CUSTOMER:

COMPOSE TYPE:
☐NONO X-STEP: " # MM "
☐ALONG Y-STEP: " # MM "

APPLICATION:
☐Instrument ☐Audio Equipments ☐Watch&Clock
☐Telephone ☐Automobile ■Other
☐Home Appliances ☐Air-condition
SAMPLE: ☐Yes ■No

SHEET 1 OF 1