受　控

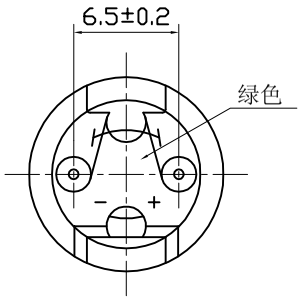

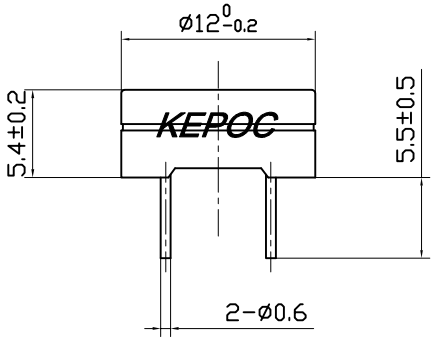

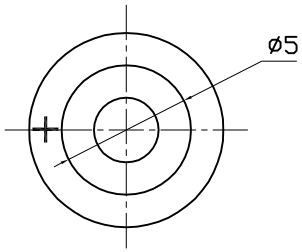

SPECIFICATIONS

1.Rated Voltage.....1.5V
2.Operating Voltage.....1-2V
3.Max.Rated Current.....10mA
4.Coil Resistance.....42±6 Ω
5.Coil Impedance.....80 Ω
6.Min.Sound Pressure Level.....70dB/10cm
7.Resonant Frequency.....2048Hz
8.Case Material.....MPPO
9.Operating Temperature.....-20～+70℃
10.Store Temperature.....-30～+80℃
11.Weight 2g

No.	DESCRIPTION	APPROVED	DATE
1	移印改成喷码	1.0版-1.1版	12.10.18

TOLERANCES UNLESS NOTED OTHERWISE
.X ±
.XX ±
.XXX ±
90° FORMED +2°
ANGLES -1°
FIRST ANGLE PROJECTION

APPROVALS		DATE
DRAWN		12.10.18
CHECKED		12.10.18
APPROVED		12.10.18

KEPO
NINGBO KEPO ELECTRONIC CO.,LTD
http://www.chinaacoustic.com

Piezo Buzzer QUARTZ-1
DAP1254C-1626

UNIT mm
DWG NO. OEM1626
SCALE NOT TO SCALE
SHEET
VER 1.1