SPECIFICATION

1. SCOPE

This specification is applied to the piezo-element.

2. SPECIFICATION (at25℃)

2.1 Resonant Frequency	:	2.9 ± 0.5 KHz
2.2 Resonant Resistace	:	500 Ω MAX
2.3 Capacitance	:	25000 pF ± 30% at 100Hz
2.4 Input Voltage	:	30 Vp-p max
2.5 Operating Temperature	:	-20~+60℃
2.6 Storage Temperature	:	-20~+70℃
3. DIMENSION	:	as per figure

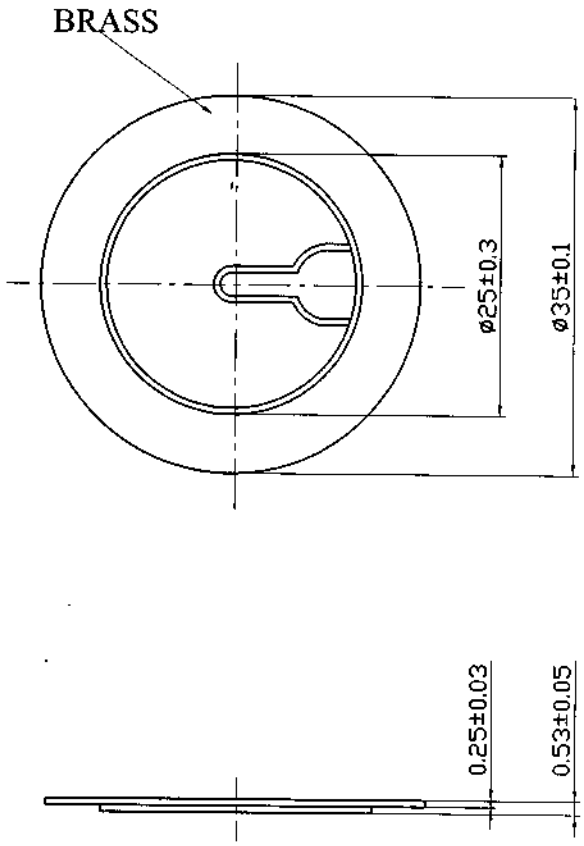

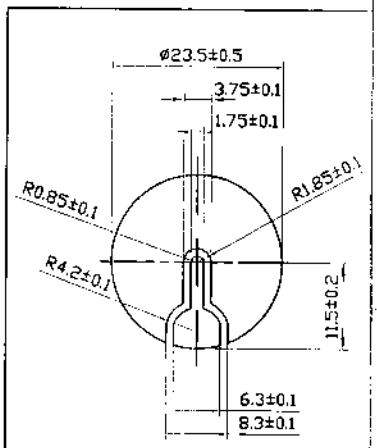

TOLERANCES UNLESS NOTED OTHERWISE .X ± .XX ± .XXX ± 90° FORMED +2° ANGLES -1°	DRAWN	王飞	KEPO MODEL NO.	CUSTOMER
	DESIGN		FT-35T-2.9B1	CUSTOMER NO.
	CHECKED			
	APPROVED	[illegible]	DWG NO.	
	DATE	07.09.26	KP3.847.765	VER 1.0 SCALE
	CONTRACT NO.			UNIT mm SHEET
FIRST ANGLE PROJECTION	AGENCY APPROVAL		KEPO CO.,LTD.	TEL:(+86)574-88370330 FAX:(+86)574-88370329