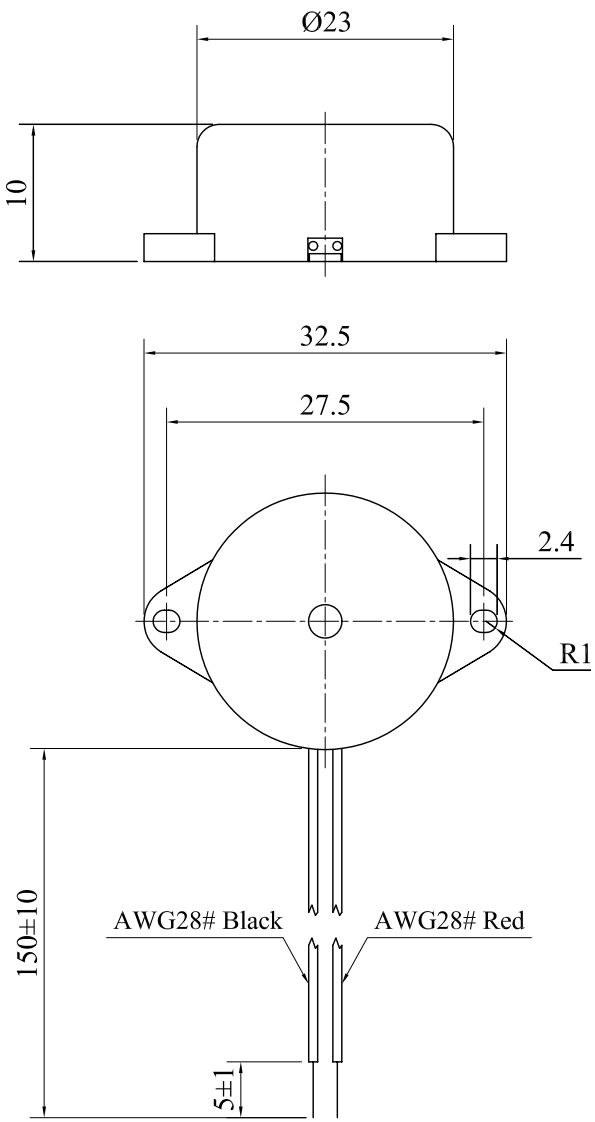

SPECIFICATION

1.Rated Voltage 12VDC
2.Operating Voltage .....3~24VDC
3.Max.Rated Current .....10mA at 12VDC
4.Resonant Frequency .....3.7±0.5KHz
5.Min.Sound Pressure Level.....82dB at 12VDC/30cm
6.Tone Nature .....Continuous
7.Case Material .....ABS
8.Operating Temperature .....-20 ~ +60℃
9.Store Temperature .....-30 ~ +70℃
10.Weight 3.5g

No.	DESCRIPTION	APPROVED	DATE

TOLERANCES UNLESS NOTED OTHERWISE
.X ±
.XX ±
.XXX ±
90° FORMED +2°
ANGLES -1°

FIRST ANGLE PROJECTION

APPROVALS	DATE
DRAWN	
CHECKED	
APPROVED	03.03.03

KEPO NINGBO KEEP IMPROVING ELECTRONIC CO.,LTD
http://www.chinaacoustic.com

Piezo Buzzer
KPI-2330E

UNIT	DWG NO.		
mm	KP3.840.046		
SCALE NOT TO SCALE	SHEET	VER 1.0	