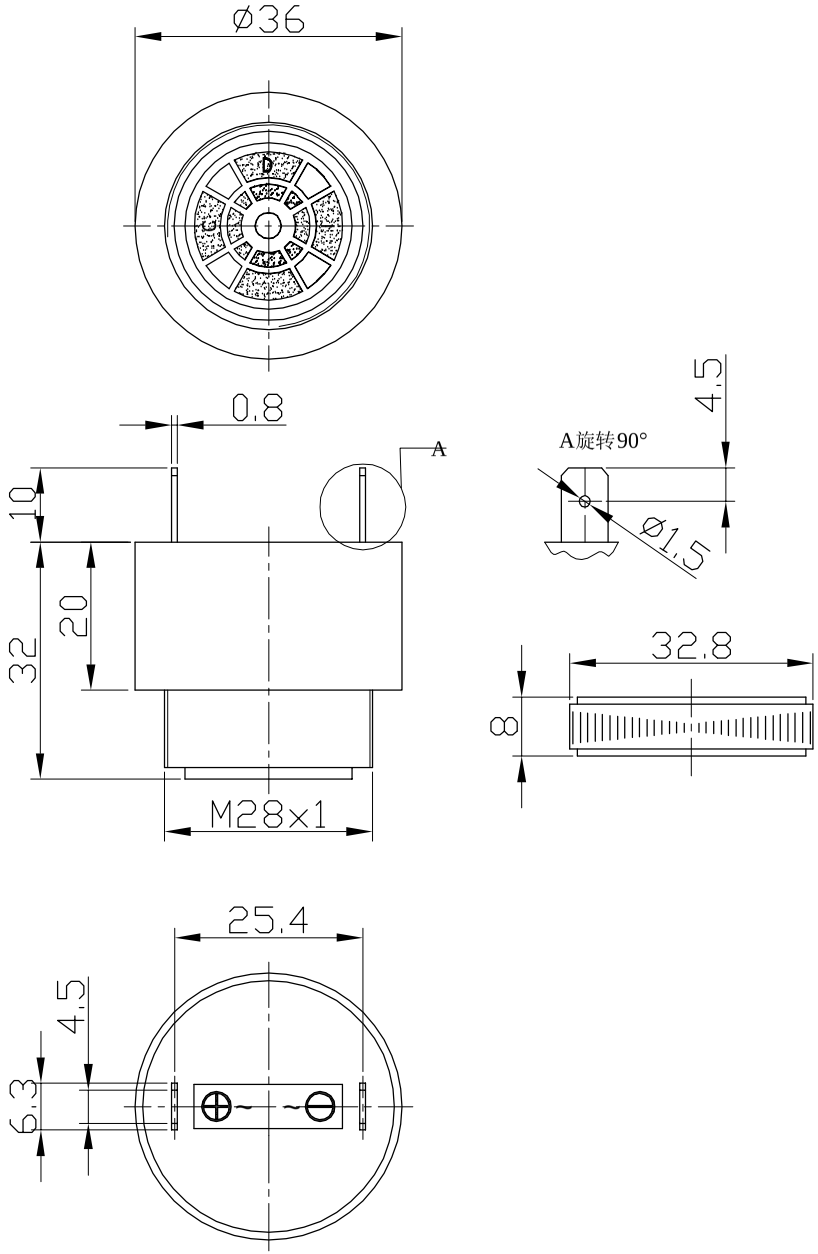

SPECIFICATION

1.Rated Voltage 24VDC/AC
2.Operating Voltage .....5~24VDC/AC
3.Max.Rated Current .....20 mA at 24VDC
4.Min.Sound Pressure Level .....75dB at 5VDC/60cm
5.Min.Sound Pressure Level .....88dB at 24VDC/60cm
6.Tone Nature .....Pulse
7.Resonant Frequency .....2.9±0.5KHz
8.Case Material .....ABS(阻燃)
9.Operating Temperature .....-20～+70℃
10.Store Temperature .....-30～+80℃
11.Weight 34g

No.	DESCRIPTION	APPROVED	DATE

TOLERANCES UNLESS NOTED OTHERWISE
.X ±
.XX ±
.XXX ±
90° FORMED ANGLES +2° -1°
FIRST ANGLE PROJECTION

APPROVALS	DATE
DRAWN	
CHECKED	
APPROVED	05.05.21

KEPO NINGBO KEPO ELECTRONIC CO.,LTD
http://www.chinaacoustic.com

Piezo Buzzer
KPI-3721-24V

UNIT	DWG NO.		
mm	KP3.840.150		
SCALE NOT TO SCALE	SHEET	VER 1.1	